Automatic Transfer Switch (ATS) Series

User Manual

◄ V1.0 ►

www.green-box.com.tw
www.data-av.com

Certifications

FCC

This equipment has been tested and found to comply with Part 15 of the FCC Rules.
Operation is subject to the following two conditions:
(1) This device may not cause harmful interference
(2) This device must accept any interference received, including interference that may cause undesired operation.

CE

This equipment is in compliance with the requirements of the following regulations:
EN 55022: CLASS B

RoHS

All contents of this package, including products, packing materials and documentation comply with RoHS.

© 2009 by Green-Box
Green-Box Technology Co. Ltd. reserves the right to make changes in the hardware, packaging, and any accompanying documentation without prior written notice.
No part of this document may be reproduced or transmitted in any form or by any means, electronic, mechanical, photocopying, recording, or otherwise, without prior written permission of Green-Box Technology Co. Ltd.

Contents

1. Introduction 1

2. Important Safety Instructions 4

3. Installation 5

4. Configurations 8

5. Specification 11

6. Remarks 12

7. Notice 13

1. Introduction

The Automatic Transfer Switch (ATS) is a single Phase Dual Input rack mountable Power Distribution Unit (PDU). When Input A falls below 168 VAC and Input B is valid, the output is automatically transferred to Input B. The output is transferred back to Input A when Input A is valid and rises above 178 VAC. This high speed transfer rate ensures that the transfer is transparent to the sensitive equipment. The two sources are not required to be in phase. This is an effective solution that builds in redundancy and increases the AC power availability of connected equipment. If the dual input power is fed through two independent AC sources, then the system availability is increased and the dual input advantages are fully used.

The ATS provides 12 receptacles that distribute redundant AC power and may be rack mounted. There are four groups of three IEC-320 (10A) receptacles, where each group is backed up by a 10A magnetic circuit breaker. The ATS has two attached line cords that are terminated with NEMA L6-30 plugs with a 20A fuse for each. The total load for the ATS cannot exceed 24A of AC load at 200-240 VAC. Also the load for each of the four groups cannot exceed 10A or the internal breaker may trip or the fuse will blow. The load must be balanced among the four segments such that the total current draw per section does not exceed 10A and a total of 24A for all the four segments of the units. This product provides line-to-line surge protection of 500 Joules.

1-1 About This Device

This guide serves as an outline to assist qualified personnel with the installation of the ATS.

- **PDU-RX24XX Series**

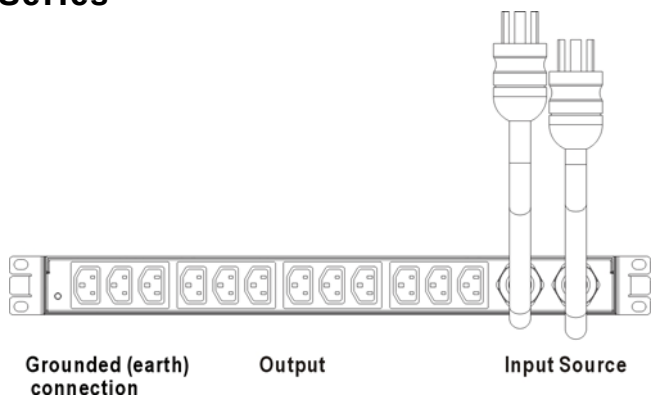

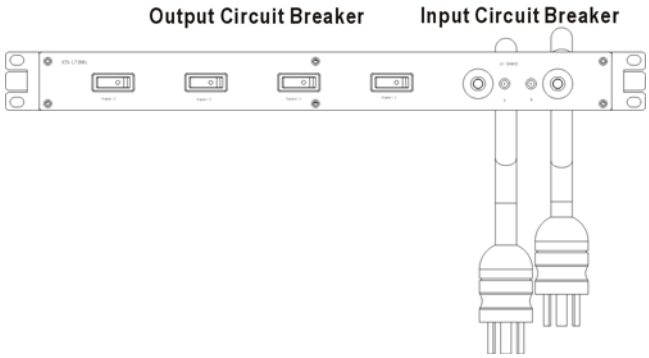

■ PDU-RM24XX Series

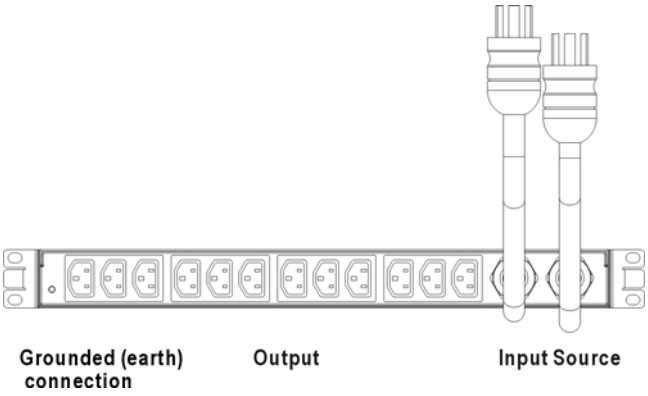

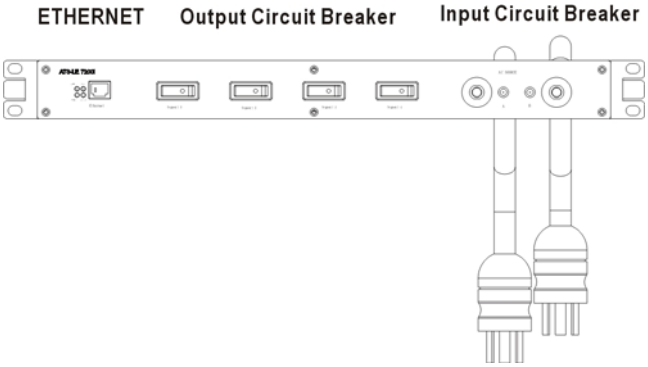

This ATS includes the following features:

- Mounts in 1U of rack space
- Provides 12 receptacles on 4 circuit breakers
- Protects against electrical line surges and spikes

WARNING:
There is a risk of personal injury from electrical shock and hazardous energy levels. The installation of options and routine maintenance and service of the product must be performed by individuals who are knowledgeable about the procedures, precautions, and hazards associated with AC power products (trained service technician). To reduce the risk of electrical shock and/or equipment damage when installing or servicing the ATS:

- The ATS must be disconnected from the product and unplugged from the AC electrical outlet before servicing or repairing product.
- Do not overload the output of the ATS. The total connected load should not exceed rated input power.
- Do not exceed the leakage current limit for the ATS in your system. See the “Earth Leakage Current” section later in this document for limits.

1-2 Earth Leakage Current

To reduce the risk of electrical shock due to high leakage current, a reliable grounded (earth) connection is essential before connecting ATS to AC power. Observe the following limits when connecting the product to AC power distribution devices.

For products that have attached AC power cords directly connected to the building power, the total combined leakage current should not exceed 5 percent of the rated input current for the device. For products that have splitting AC power cords, the total combined leakage current should not exceed 3.5mA.

2. Important Safety Instructions

SAVE These Instructions

This manual contains important instructions that should be closely followed during installation and maintenance of this product. This product is designed for Commercial/Industrial use only. It is not intended for use with life support and other U. S. FDA designated “critical” devices. Maximum load must not exceed that shown on the rating label.

WARNING:
Lethal voltages may be present within this unit even when it is apparently not operating. Observe all cautions and warnings in this manual. Failure to do so MAY result in serious injury. This equipment is designed for use on a properly grounded (earthed), 208/240 VAC, 50Hz or 60Hz supply. ELECTROMAGNETIC COMPATIBILITY- The ATS complies with the limits for a CLASS B digital device, pursuant to part 15 of FCC rules.

These limits provide reasonable protection against harmful interference. If this device is not installed and used in accordance with the instruction manual, it may cause harmful interference to radio communications. Not operating this device in accordance with these instructions may cause harmful interference, which the user must correct at their own expense. Operate the ATS in an indoor environment only in an ambient temperature range of 0°C to 50°C (32°F to +122°F).

Install it in a clean environment, free from conductive contaminates, moisture, flammable liquids, gasses, or corrosive substances. Turn the ATS off and isolate it from other equipment before cleaning. Use a soft cloth, never liquid or aerosol cleaners. Keep the vents free from dust accumulation that could restrict airflow. Never block or insert any object into the ventilation holes or other openings.

3. Installation

Use screw, one on each side to attach rails to rear of rack through cage nut. Use screw (two on each side) to attach rails to front of rack. Use screws (two on each side) to attach brackets to side of unit. Slide unit into rails and secure by using screws (one on each side) to attach the unit.

3-1 Ground Bonding Screw

A ground bonding screw is provided on the rear of the unit. This feature is provided as an attachment point for conductors the rack may contain for the purpose of functional grounding or bonding of ungrounded metal parts. Ground cables are not included.

Note:
The Ground Bonding wire must be a minimum of 10 AWG to maintain proper grounding.

Note:
This note is intended to provide information on basic grounding techniques that wlll help prevent ATS damage due to lighting.

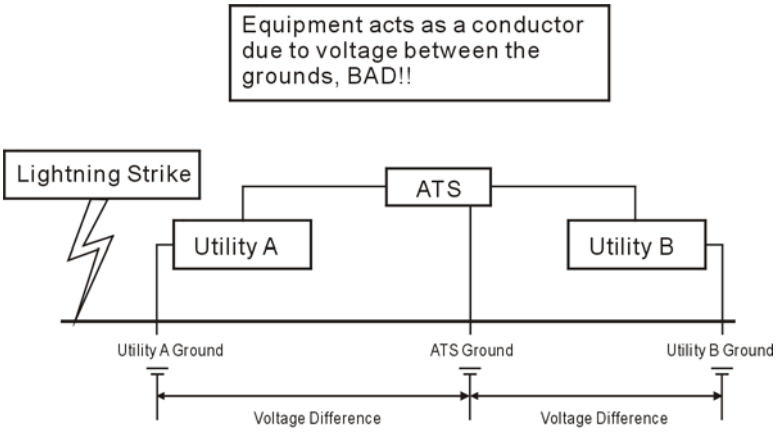

Multiple Point Ground System

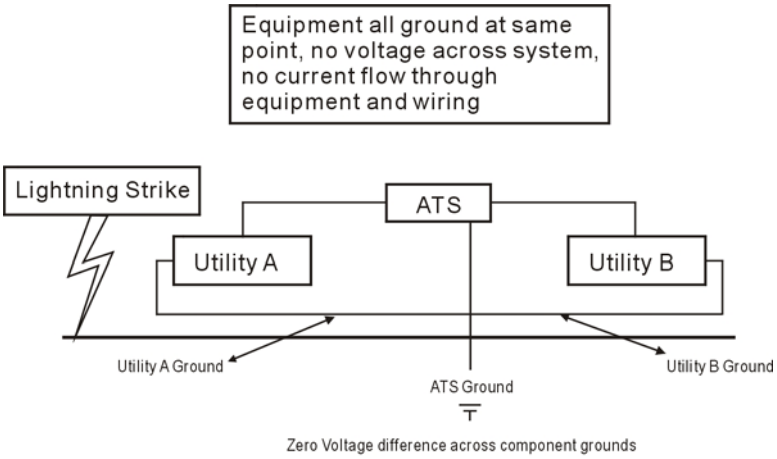

Single Point Ground System

3-2 Connecting Devices

Make sure that the devices connected do not exceed the unit capabilities. This Dual Input ATS features 3 output receptacles per circuit breaker, for a total of 12 receptacles. This model is rated at 10A per breaker. Each block of 3 receptacles has a maximum output rating of 10A. If the total connected load exceeds 10A, the circuit breaker will trip and interrupt power to all loads attached to that block of receptacles. The maximum output of this ATS is 24A. If the total load connected to all load segments exceed 24A, the circuit breaker at the wall could trip and interrupt power to all loads.

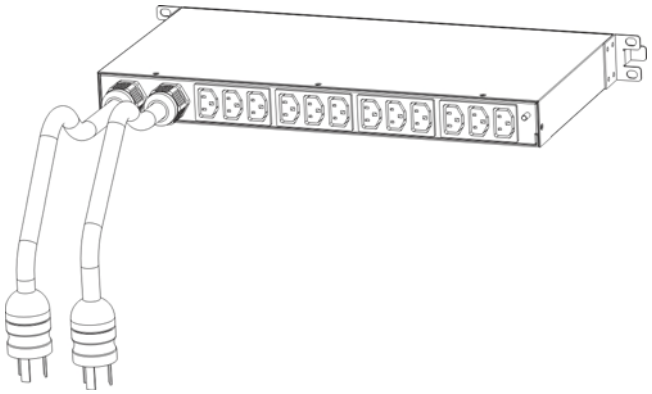

3-3 About the Circuit Breakers

Input power can be verified by the illumination of the two LEDs on the front of the unit, marked ~1 and ~2. Output power can be verified by the illumination of the circuit breaker when in the “ON” position. If connected device is not powered, verify the respective circuit breaker is “ON” and illuminated.

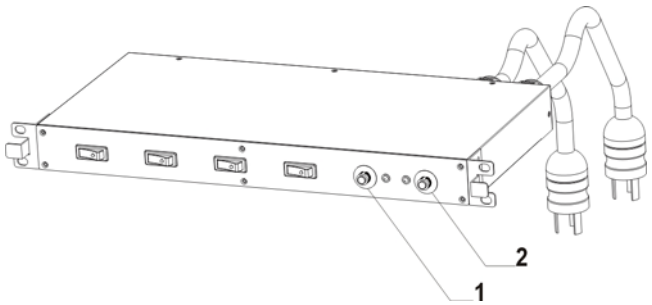

3-3 Connecting Network (for PDU-RM24XX Series)

Plug an RJ45 Ethernet cable to the connector in the front panel as shown.
Check the software configuration and operation in the software manual.

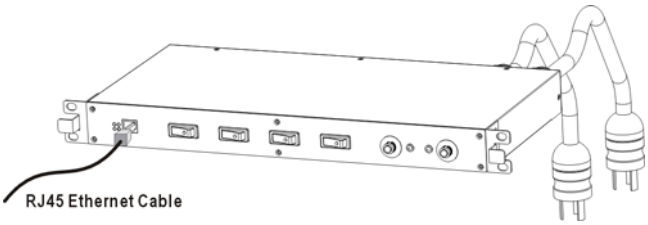

Note:
Please check the operation in the software user's manual

4. Configurations

The ATS can be configured to fit several power distribution requirements.

■ Configuration 1

This application shows use of the ATS in conjunction with singleline cord devices.

Note:
Each segment can accommodate a maximum current draw of 10A, so the individual load connected to it must not exceed 10A or the circuit breaker will trip.

~A: AC Input A

~B: AC Input B

1,2,3,4: Load segments on the ATS

Load: Any server, storage, or other equipment connected to the ATS

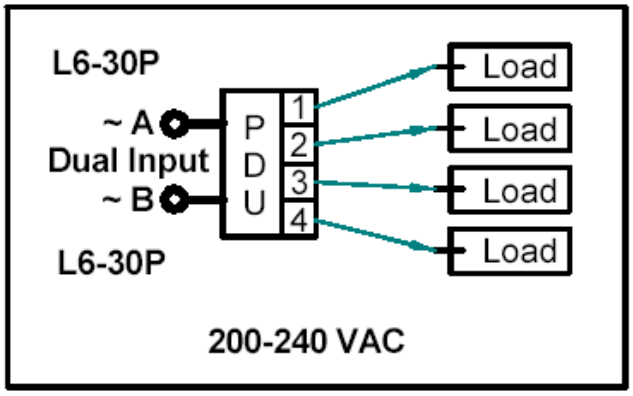

■ Configuration 2

This configuration shows the use of the ATS with 3-line cord devices. The figure below shows how three ATSs can be used to connect with up to four 3-line cord devices.

Note:
Each segment can accommodate a maximum current draw of 10A, so the individual load connected to it must not exceed 10A or the circuit breaker will trip.

~A: AC Input A

~B: AC Input B

Load: Any server, storage, or other equipment connected to the ATS

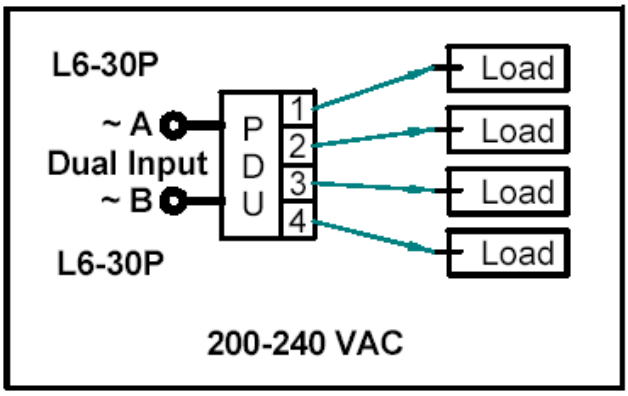

■ Configuration 3

This configuration shows the use of a ATS with 2-line cord devices. In this configuration, a server is connected to each of the four segments of the ATS.

Note:
Each segment can accommodate a maximum current draw of 10A, so the individual load connected to it must not exceed 10A or the circuit breaker will trip.

~A: AC Input A

~B: AC Input B

1,2,3,4: Load segments on the ATS

Load: Any server, storage, or other equipment connected to the ATS

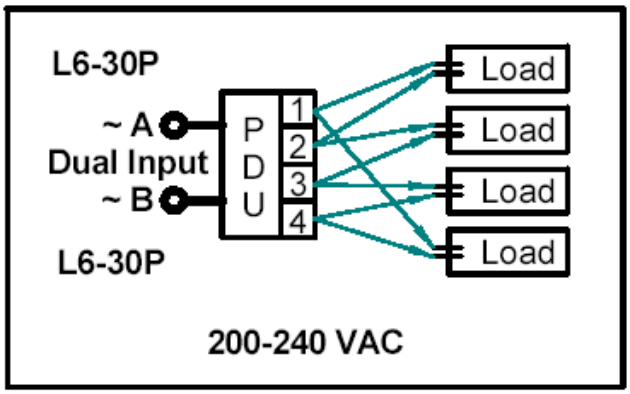

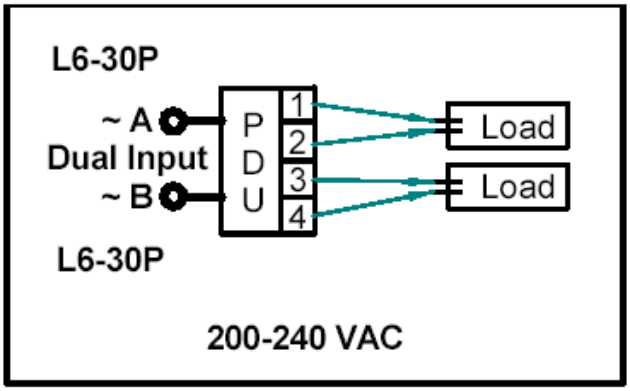

■ Configuration 4

If your facility does not have a centralized Uninterruptible Power System, then the following configuration will provide maximum redundancy in a rack environment. The diagram below shows how to use three ATSs, each connected to a UPS and a server.

Note:
Each segment can accommodate a maximum current draw of 10A, so the individual load connected to it must not exceed 10A or the circuit breaker will trip.

~A: AC Input A

~B: AC Input B

Load: Any server, storage, or other equipment connected to the ATS

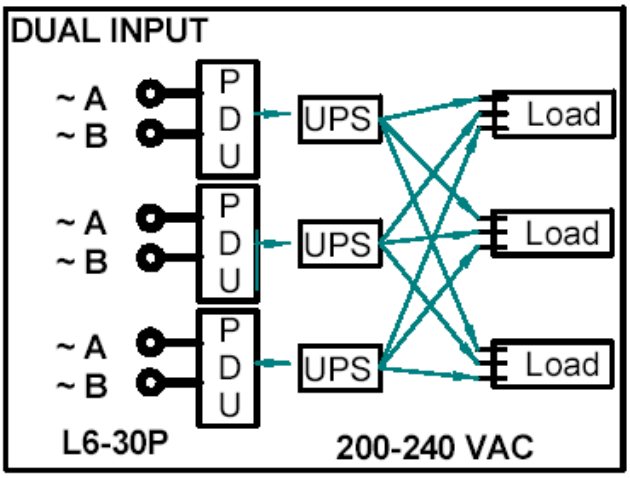

5. Specification

Model No.	PDU-RX2422-1204	PDU-RM2422-1204	PDU-RX2411-1204	PDU-RM2411-1204
Input				
Nominal Voltage	200 to 240 VAC		110 to 130 VAC	
Voltage	180 to 262 VAC		100 to 143 VAC	
Frequency	50/60 HZ			
Input	(2) attached 12 ft. cords with NEMA L6-30 plugs		(2) attached 12 ft. cords with NEMA L5-30 plugs	
Protection	Circuit breaker 2 x 30A			
Surge	500 Joules			
Output				
Output Receptacle	(12) IEC 320-C13 (4)			
Protection	Circuit breaker 4x10 Amp.			
Output Power	4320 VA		2400 VA	
Max. Current	24 A			
Detection and Transfer	50Hz < 20 ms; 60Hz < 16ms			
Transfer Time	50Hz < 10 ms; 60Hz < 8ms			
Communication				
Ethernet	n/a	Yes	n/a	Yes
Environment				
Temperature	Celsius 10 to 50 degree			
Storage Temp.	Celsius -30 to 60 degree			
Humidity	10% to 80%, non-condensing			
Latitude	0 ~ 3,000 meters (10,000 feet) above sea level			
Size (HxWxD)	44x432x216 mm			
Weight	7 kg			

6. Remarks

I. Please read this operation manual carefully before operating the device.

II. To prevent potential power damage do not use 2-wire extension cords. Ensure DC outlets at PCs and displays are on the same phase and have correct and common grounding.

III. Limited Warranty:

(1) In no events shall the vendor's liability for direct or indirect, special, incidental or consequential damages, loss of profit, loss of business, or financial loss which hay be caused by the use of the product exceeds the price paid for the product.

(2) The vendor makes no warranty or representation, expressed or implied with respect to the contents or use of this documentation, and especially disclaims its quality, performance, merchantability, or fitness for any particular purpose.

(3) The vendor also reserves the right to revise or update the product or documentation without obligation to notify any user of such revisions or updates. For further information please contact your vendor.

7. Notice

1. All other company or product names mentioned herein are trademarks or registered trademarks of their respective companies.
2. Specifications are subject to change without notice.
3. Please read user manual carefully before operating the device
4. Please use the power adaptor accompanied with this product. Warranty does not cover for damages caused by pairing other power adaptor
5. Please check all connecting devices are properly grounded to avoid electric failure
6. This product has limited warranty for one year from defects in material and workmanship. Items that are physically damaged, misused, tempered with or altered are void of warranty. For further details please contact your distributor. In case warranty sticker is damaged or missing, warranty is void. For further details please contact your distributor.